Lab 2.4 – Configuring Rapid PVST+, Portfast and BPDUGuard

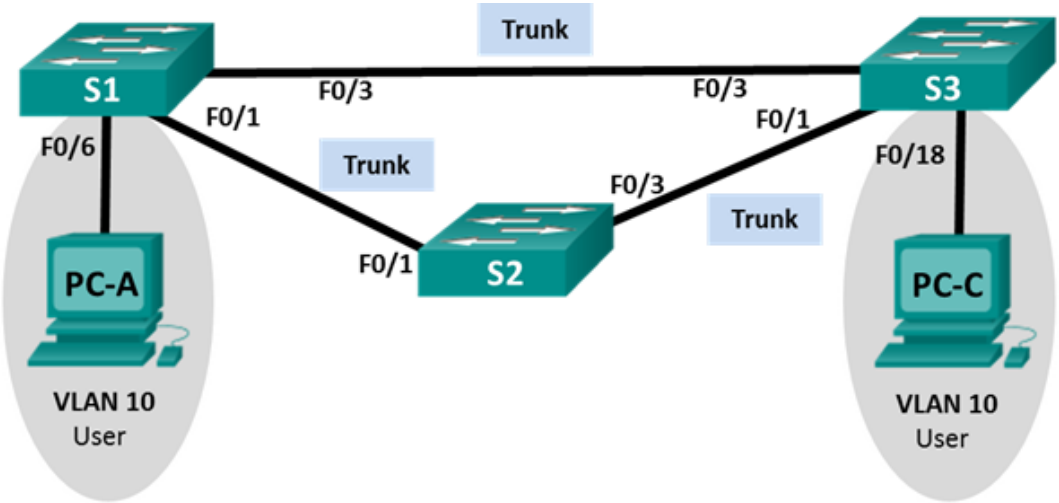

Addressing Table

Device	Interface	IP Address	Subnet Mask
PC-A	NIC	192.168.10.1	255.255.255.0
PC-C	NIC	192.168.10.2	255.255.255.0

Objectives

Part 1: Build the Network and Configure Device Initial Settings

Part 2: Configure the Root Bridge and Examine PVST+ Convergence

Part 3: Configure Rapid PVST+, PortFast, BPDU Guard, and Examine Convergence

Background / Scenario

Rapid PVST+ (IEEE 802.1w) is an enhanced version of PVST+ and allows for faster spanning-tree calculations and convergence in response to Layer 2 topology changes. Rapid PVST+ defines three port states: discarding, learning, and forwarding, and provides multiple enhancements to optimize network performance.

In this lab, you will configure the primary and secondary root bridge, examine PVST+ convergence, configure Rapid PVST+ and compare its convergence to PVST+. In addition, you will configure edge ports to transition immediately to a forwarding state using PortFast and prevent the edge ports from forwarding BDPUs using BDPU guard.

© 2023 Cisco and/or its affiliates. All rights reserved. This document is Cisco Public.

Part 1: Build the Network and Configure Basic Device Settings

Step 1: Cable the network as shown in the topology.

Step 2: Configure PC hosts.

Assign PC IP addresses and subnet according to the addressing table.

Step 3: Configure basic and VLAN settings for each switch.

a. Configure switch host names.

b. Configure VLANs and trunks on switches.

1) Use the appropriate commands to create VLAN 10 on all of the switches. Name VLAN 10 as **User**

2) Configure S1 F0/6 and S3 F0/18 as access ports and assign them to VLAN 10.

3) Configure ports F0/1 and F0/3 on all switches as trunk ports.

Step 4: Test host connectivity

Perform a ping test from PC-A to PC-C. If unsuccessful, troubleshoot network settings as necessary.

Part 2: Configure the Root Bridge and Examine PVST+ Convergence

In Part 2, you will determine the default root in the network, assign the primary and secondary root, and examine convergence of PVST+.

Step 1: Configure a primary and secondary root bridge for all existing VLANs.

a. Configure switch S2 to be the primary root bridge for all existing VLANs.

What command/s are needed to accomplish this?

spanning-tree vlan 1, 10 root primary

b. Configure switch S1 to be the secondary root bridge for all existing VLANs.

What command/s are needed to accomplish this?

spanning-tree vlan 1, 10 root secondary

c. Wait for the network spanning tree to converge then observe the state of the network links.

Which interface in the network is currently in a blocking state?	S3 F0/3

Step 2: Change the Layer 2 topology and examine convergence.

To examine PVST+ convergence, you will create a Layer 2 topology change and monitor the progression of spanning-tree events.

a. Create a topology change by disabling interface F0/1 on S3.

```
S3(config)# interface f0/1
```

© 2023 Cisco and/or its affiliates. All rights reserved. This document is Cisco Public.

```
S3(config-if)# shutdown
S3(config-if)# end
```

b. Immediately afterwards, issue the **show spanning-tree** command on S3 **every 15 seconds** to observe changes in port states.

```
S3#show spanning-tree
VLAN0001
  Spanning tree enabled protocol ieee
  Root ID    Priority    24577
             Address     00E0.B096.BB8C
             Cost        38
             Port        3(FastEthernet0/3)
             Hello Time  2 sec  Max Age 20 sec  Forward Delay 15 sec

  Bridge ID  Priority    32769  (priority 32768 sys-id-ext 1)
             Address     00E0.A3AB.D3E6
             Hello Time  2 sec  Max Age 20 sec  Forward Delay 15 sec
             Aging Time  20

Interface        Role Sts Cost      Prio.Nbr Type
---------------- ---- --- --------- -------- --------------------------------
Fa0/3            Root LSN 19        128.3    P2p

S3#show spanning-tree
VLAN0001
  Spanning tree enabled protocol ieee
  Root ID    Priority    24577
             Address     00E0.B096.BB8C
             Cost        38
             Port        3(FastEthernet0/3)
             Hello Time  2 sec  Max Age 20 sec  Forward Delay 15 sec

  Bridge ID  Priority    32769  (priority 32768 sys-id-ext 1)
             Address     00E0.A3AB.D3E6
             Hello Time  2 sec  Max Age 20 sec  Forward Delay 15 sec
             Aging Time  20

Interface        Role Sts Cost      Prio.Nbr Type
---------------- ---- --- --------- -------- --------------------------------
Fa0/3            Root LRN 19        128.3    P2p

S3#show spanning-tree
VLAN0001
  Spanning tree enabled protocol ieee
  Root ID    Priority    24577
             Address     00E0.B096.BB8C
             Cost        38
             Port        3(FastEthernet0/3)
             Hello Time  2 sec  Max Age 20 sec  Forward Delay 15 sec
```

© 2023 Cisco and/or its affiliates. All rights reserved. This document is Cisco Public.

```
  Bridge ID  Priority    32769  (priority 32768 sys-id-ext 1)
             Address     00E0.A3AB.D3E6
             Hello Time  2 sec  Max Age 20 sec  Forward Delay 15 sec
             Aging Time  20

Interface        Role Sts Cost      Prio.Nbr Type
---------------- ---- --- --------- -------- --------------------------------
Fa0/3            Root FWD 19        128.3    P2p
```

Which port states did F0/3 transition through during network convergence?

F0/3 went through LIS, LTN, FWD during network convergence

Approximately how long did it take the network to converge and ports to settle in forwarding state after the topology change?

The whole process took about 30 seconds

Part 3: Configure Rapid PVST+, PortFast, BPDU Guard, and Examine Convergence

In Part 3, you will configure Rapid PVST+ on all switches. You will configure PortFast and BPDU guard on all access ports, and then observe the speed at which Rapid PVST+ converges after a topology change.

Step 1: **Configure Rapid PVST+.**

a. Configure the switches to use Rapid PVST+ mode for their spanning trees. Note that there is no need to reconfigure the bridge priority settings since the previously configured commands are also applied to Rapid-PVST+ mode.

```
S1(config)#spanning-tree mode rapid-pvst

S2(config)#spanning-tree mode rapid-pvst

S3(config)#spanning-tree mode rapid-pvst
```

b. Verify configurations using the **show spanning-tree** command.

```
S1# show spanning-tree
   VLAN0001
     Spanning tree enabled protocol rstp
     Root ID    Priority    24577
                Address     00E0.B096.BB8C
                Cost        19
                Port        1(FastEthernet0/1)
                Hello Time  2 sec  Max Age 20 sec  Forward Delay 15 sec

     Bridge ID  Priority    32769  (priority 32768 sys-id-ext 1)
                Address     00E0.A3AB.D3E6
                Hello Time  2 sec  Max Age 20 sec  Forward Delay 15 sec
```

© 2023 Cisco and/or its affiliates. All rights reserved. This document is Cisco Public.

```
                 Aging Time  20

Interface        Role Sts Cost      Prio.Nbr Type
---------------- ---- --- --------- -------- --------------------------------
Fa0/1            Root FWD 19        128.1    P2p
Fa0/3            Altn BLK 19        128.3    P2p
```

Step 2: **Examine Rapid PVST+ convergence.**

Create a topology change by enabling interface F0/1 on switch S3 and observe the time for ports to be fully operational.

```
S3(config)# interface f0/1
S3(config-if)# no shutdown
```

How does the convergence time of Rapid PVST+ compare with PVST+ when responding to a topology change?

The convergence time is much more faster on Rapid PVST+ compared to PVST+. Rapid PVST+ took just a second, but PVST+ took about half a minute

Step 3: **Configure PortFast on access ports.**

PortFast is a feature of spanning tree that transitions a port immediately to a forwarding state as soon as it is turned on. This is useful in connecting hosts so that they can start communicating on the VLAN instantly, rather than waiting on spanning tree.

a. Disconnect then reconnect PC-A on F0/6 of S1.

b. While the link indicator of S1 F0/6 is still orange, attempt to ping PC-C from PC-A.

What is the result of the ping test?	Destination host unreachable

c. After some time, the link indicator should turn green, reattempt to ping PC-C from PC-A

What is the result of the ping test?	Reply. The connection is successful

Why do you think is there a noticeable delay from the time that the PC is connected to the port before the link becomes fully operational?

There is a noticeable delay from connection to fully operational because the port goes through states before it allows full connection. These states are Listening, Learning, and Forwarding

d. Enable PortFast on S1 interface F0/6.

```
S1(config)#interface f0/6
S1(config-if)#spanning-tree portfast
%Warning: portfast should only be enabled on ports connected to a single
host. Connecting hubs, concentrators, switches, bridges, etc... to this
interface when portfast is enabled, can cause temporary bridging loops.
Use with CAUTION

%Portfast has been configured on FastEthernet0/6 but will only
have effect when the interface is in a non-trunking mode.
```

© 2023 Cisco and/or its affiliates. All rights reserved. This document is Cisco Public.

Step 4: **Observe the effect of PortFast on access ports.**

a. Disconnect then reconnect PC-A on F0/6 of S1 again then observe the interface link indicator.

How does the port behavior upon connection of a host compare to when Portfast was not enabled?

The port immediately turned green. The host was connected instantly when Portfast was enabled.

b. Attempt to ping PC-C from PC-A.

What is the result of the ping test?	Successful. Reply

c. Using the **show spanning tree** command on S1, view the status of F0/6.

What is the current port state of F0/6?	Forwarding

Step 5: **Configure BPDUGuard on access ports**

A port that immediately transitions to a forwarding state can cause issues when a switch is accidentally or intentionally connected to it because this can lead to an unwanted spanning tree topology change. The BPDUGuard feature can be enabled to prevent ports that are configured with PortFast from forwarding BPDUs which could change the spanning tree topology.

Enable BPDUGuard on S1 F0/6 since this port is intended for connection to end devices only.

```
S1(config)#interface f0/6
S1(config-if)#spanning-tree bpduguard enable
```

Step 6: **Observe the effect of BPDUGuard on access ports.**

a. Disconnect PC-A from S1 F0/6 and replace it with a switch. You may do so by adding a new switch to the topology and connecting any of its ports to S1 F0/6.

Observe and describe what happens to S1 F0/6 when the new switch was connected:

An error message was shown and the port was shutdown.

b. Check the status of S1 F0/6 using the **show interface** command.

```
S1#show interface f0/6
  FastEthernet0/6 is down, line protocol is down (err-disabled)
    Hardware is Lance, address is 0010.118a.6406 (bia 0010.118a.6406)
   BW 100000 Kbit, DLY 1000 usec,
       reliability 255/255, txload 1/255, rxload 1/255
    Encapsulation ARPA, loopback not set
    Keepalive set (10 sec)
    Full-duplex, 100Mb/s
    input flow-control is off, output flow-control is off
    ARP type: ARPA, ARP Timeout 04:00:00
    Last input 00:00:08, output 00:00:05, output hang never
    Last clearing of "show interface" counters never
    Input queue: 0/75/0/0 (size/max/drops/flushes); Total output drops: 0
    Queueing strategy: fifo
```

© 2023 Cisco and/or its affiliates. All rights reserved. This document is Cisco Public.

```
Output queue :0/40 (size/max)
5 minute input rate 0 bits/sec, 0 packets/sec
5 minute output rate 0 bits/sec, 0 packets/sec
   956 packets input, 193351 bytes, 0 no buffer
   Received 956 broadcasts, 0 runts, 0 giants, 0 throttles
   0 input errors, 0 CRC, 0 frame, 0 overrun, 0 ignored, 0 abort
   0 watchdog, 0 multicast, 0 pause input
   0 input packets with dribble condition detected
   2357 packets output, 263570 bytes, 0 underruns
   0 output errors, 0 collisions, 10 interface resets
   0 babbles, 0 late collision, 0 deferred
   0 lost carrier, 0 no carrier
   0 output buffer failures, 0 output buffers swapped out
```

What is the status of the F0/6 interface?

The status is down (err-disabled)

Reflection

1. Why would the faster convergence time of Rapid-PVST+ be considered an advantage over PVST+?

In corporate networks, there are vital servers that hosts need to connect to immediately. With PVST+, the 30 second delay is already a major liability and will affect the reliability of the network. This is where Rapid PVST+ comes in hand, with an immediate connection the network is ensured to remain reliable

2. Why is it considered a security risk to enable Portfast on access ports without enabling BPDUGuard as well?

It is considered a security risk to enable Portfast without BPDUGuard enabled on access ports because ports are automatically changed to forwarding state, ergo BPDUs can also be sent instantly. This increases the possibility of rogue switches and broadcast storms from loops.

© 2023 Cisco and/or its affiliates. All rights reserved. This document is Cisco Public.